NextLPG

Pipe Installation Manual 1.0 English



NEXT PLASTICS

I. IMPORTANT INSTALLATION POINTS

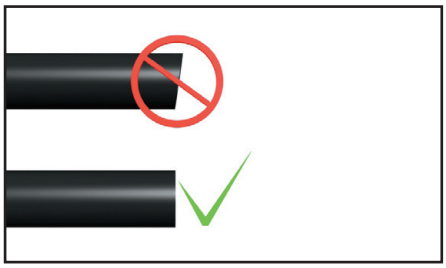

Pipes must be cut squarely to fit the NP CF10 compression coupling.

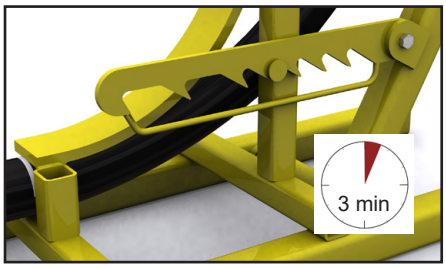

Wait 3 minutes between each notch when bending the pipe.

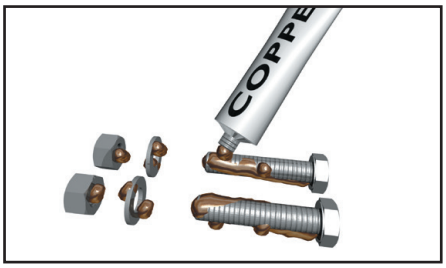

Lubricate stainless steel bolts, washers and nuts with copper paste, ceramic paste or MoS2.

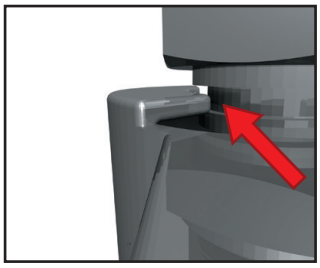

Make sure the edges of the NP CF10 are fitted into the groove of the NP IC10-NPT insert.

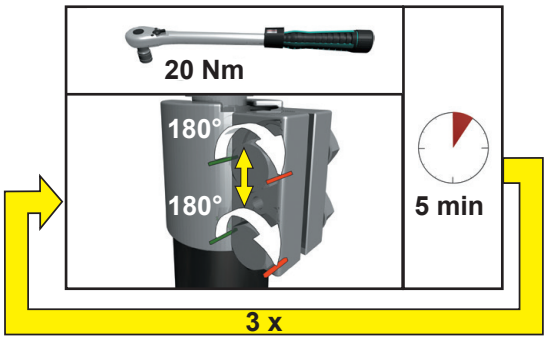

Use a torque wrench to tighten the NP CF10 coupling in steps:

- 3 times up to 20 Nm waiting 5 minutes in between, then...

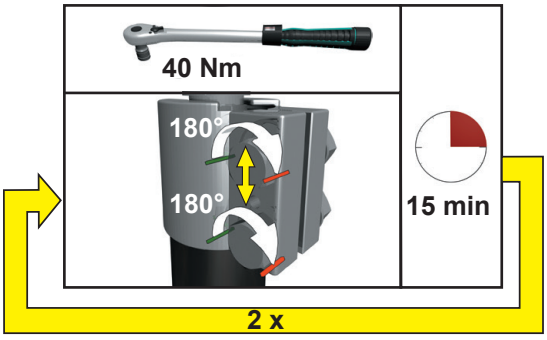

- 2 times up to 40 Nm, waiting 15 minutes in between, and finally....

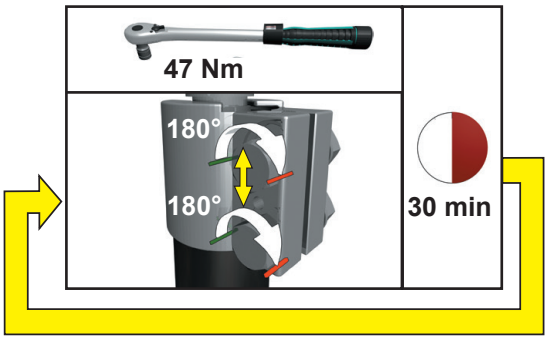

- Repeatedly up to 47 Nm, waiting 15-30 minutes in between, until the coupling is completely closed.

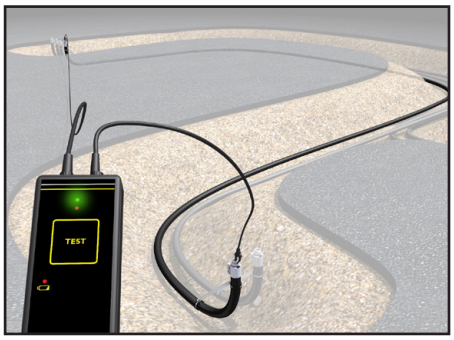

Measure conductivity when the NP CF10 and NP IC10-NPT couplings are mounted.

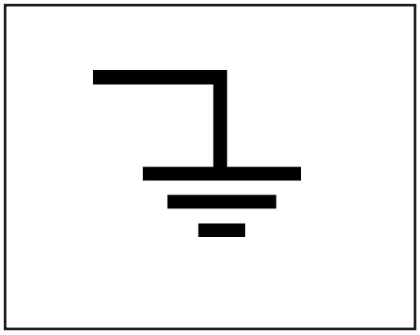

Provide earthing according to standards and regulations. Consult a competent electrical engineer.



Pressure test the pipe at 25 bar (363 psi) or according to local regulations, but max 40 bar (580 psi).



Perform tightness test with soaping before backfill.

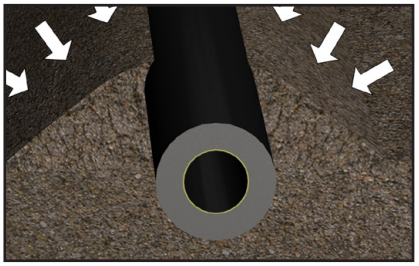

Backfill with sand.

CONTENTS

I.	Important installation points	2
2.	The NextLPG Pipe	5
2.1	How to Order	5
2.2	Warranty	5
3.	About LPG	5
4.	LPG filling station	6
5.	Transport, Handling and Storage	7
5.1	On Site	7
5.2	Coils	7
6.	Site Preparation and Pipe Arrangement	8
6.1	Site Readiness	8
6.2	Pipe Arrangement & Preparing Trenches and Beds	8
6.3	Uncoiling Pipes	9
7.	Installation	10
7.1	Pipe Installation	10
7.2	Cutting the Pipe	10
7.3	Bending the Pipe	11
7.4	Mounting the Transition Fittings	13
7.5	Testing conductivity	15
7.6	Earthing	15
7.7	Connecting to the tank and dispenser	16
8.	Pressure and Tightness Testing	17
8.1	Pressure Test - Mandatory	17
8.2	Tightness Test - Optional	17
9.	Completing the Installation	19
9.1	Documentation	19
9.2	Backfill	19
9.3	Before commissioning	19
10.	Modification and Repair of Installations	20
10.1	Preparations and Safety Considerations	20
10.2	Modification and Repair	20
10.3	Pressure and Tightness Testing After Modification and Repair	20
11.	Safety Considerations	21
11.1	Releasing and Cutting Coils	21
11.2	Use of Equipment	21
11.3	Pressure Testing	21
11.4	Repair, Maintenance and Upgrading Work	21
11.5	Hazardous Substances	21

Appendices	23
A. Pipe Installation Example	24
B. LPG Pipe Installation Checklist	25
C. LPG Pipe Test Document	26
D. LPG Pipe Tightness Test	27

Disclaimer

This document contains recommendations and information regarding the NextLPG products and their installation. It is based on currently available information and is believed to be representative under specific conditions. However, factors as environment, applications, installation or changes in operating procedure may cause different results. Next-Plastics makes no representation of warranty of any kind, express or implied, as to the accuracy, adequacy or completeness of the recommendations or information contained herein. Next-Plastics neither assumes nor authorizes any representative or other person to assume for it any obligation or liability other than such as is expressly set forth. Attention is drawn to any relevant local, national or regional regulations.

Next-Plastics reserves the right to update and revise this manual without prior notice. The current version is always published at www.next-plastics.com. Next-Plastics accepts no liability for installations that are not fully compliant with the instructions given in the current installation manual.

2. THE NEXTLPG PIPE

The NextLPG pipe is designed for the high pressures used in LPG distribution. With an operating pressure of 25 bars, our LPG pipe is designed to meet the high standards of safety in the LPG industry.

The NextLPG pipe with its protective liner is completely corrosion resistant and electrostatically safe.

The NextLPG pipe is made of polyethylene that is well suited for underground use at filling stations as it is corrosion free and resistant to water and microorganisms present in the ground.

The conductive layer makes it possible to ground the pipe, thus preventing build-up of static electricity that otherwise would accumulate when the fuel flows in a plastic pipe.

Installation of the NextLPG Pipe is easy and quick compared to conventional steel pipe installations. The NextLPG pipe is a semi flexible plastic pipe, easily rolled out into the trenches of the station from end to end, and then connected to the tank and dispensers. No welding or complicated installation procedures are needed, and the installation can be completed in less than one day!

When used with cathodic ptotection, NextLPG pipes do not need to be isolated from the tank, since the conductivity is too low to interfer with the cathodic protection.

The NextLPG pipes are designed for long term operating conditions with temperatures between -20 ºC (14 ºF) and +40 ºC (104 ºF).

2.1 How to Order

You can place your order by phone, e-mail or, if you are a registered customer, from our website at www.next-plastics.com.

2.2 Warranty

The NextLPG pipe is manufactured at an ISO 9001 and ISO 14001 certified facility.

Next-Plastics provides a 5 year warranty on our LPG pipe, provided that all handling, storage and installation work is performed strictly in accordance with the requirements specified in installation instructions shipped with the product or in the current installation manual, available for download at www.next-plastics.com. The installation checklist must always be filled out and saved for the duration of the warranty period.

It is also a condition of all warranties that the installation that only Next-Plastics products are used in the system.

Next-Plastics accepts no liability for installations that fail to meet the conditions specified above, and failure to comply may result in withdrawn certified installer status.

3. ABOUT LPG

LPG or LP Gas is an abbreviation of Liquefied Petroleum Gas. When used as a vehicle fuel, LPG is sometimes refered to as *autogas*. LPG is a mixture of the hydrocarbons butane and propane. Butane and propane are both gases at normal room temperature and atmospheric pressure, but under moderate pressure they will become a liquid. This permits easy transportation and storage of LPG in its concentrated liquid form.

LPG comes from the refining of crude oil or is extracted from natural gas or crude oil streams coming from underground reserviors. LPG in its pure form is odorless but is odorized to aid the detection of leaks. The gas is slightly heavier than air and will flow to lower lying areas in case of a leak. When released from pressure LPG will expand and 1 liter of fluid becomes 250 liters of vapor.

LPG in its liquid form will increase in volume by 2 % for every 10 degrees (C) increased temperature. For this reason, LPG tanks should never be filled up to more than 85% (regulations will vary).

In LPG intented as a vehicle fuel, butane and propane are mixed in proportions optimal for complete combustion of the product. Compared to petrol LPG gives less exhaust emissions. Depending on government taxes and incendives, LPG can sometimes be much cheaper than petrol and the performance is comparable to petrol and diesel.

LPG is slightly less prone to ignition than petrol. Between approximately 2 % and 9 % of LPG vapors in the air will create a flammable atmosphere. Liquid LPG spillage will evaporate quickly but in contact with the skin it can cause cold burns. Follow applicable safety regulations and use protective clothing.

4. LPG FILLING STATION

Many LPG filling stations have the tank installed above ground, but there are also stations where the tank is buried. The operating pressure in the pipes is usually around 15 bar. The high pressure is necessary to keep the LPG in its liquid form. The pressure in the tank is lower, usually between 3 and 5 bar depending on mixture and temperature.

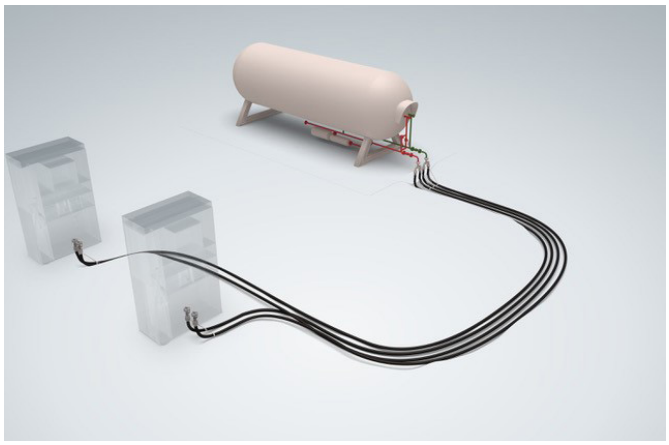

From the tank to each dispenser runs a product line that feeds the liquid LPG to the dispenser. In parallell with the product line runs a vapor return line where LPG vapor from refueling operations is returned to the tank.

In the case of an above ground tank, the pump sits under the tank. The liquid fuel is tapped from the bottom of the tank, goes through a filter that removes any water, into a tranquillizing zone before it enters the pump. Tranquilizing the fuel is important to minimize turbulence that could cause cavitation (formation of bubbles on the suction side of the pump) and mechanical damage to the pump.

From the pump, the fuel will go in the product supply pipe to the dispensers. The transition from steel pipes to NextLPG pipes is done at ground level in both ends. To regulate the pressure in the supply line, there is an automatic bypass that returns liquid fuel to the tank as needed to achieve the correct pressure. A manual bypass line goes in parallell with the automatic bypass to allow for adjustment of pressure even if the automatic bypass is blocked. The tank can be filled from an entry on the bypass line or at a dedicated fill opening.

On the tank and on all lines, including sections of pipe that can be shut by any valve, there is a safety relief valve set to 25 bar.

5. TRANSPORT, HANDLING AND STORAGE

The Next-Plastics polyethylene pipes are resilient and particularly suited for underground installation as the polyethylene material will not corrode like steel pipes. Nevertheless pipes and fittings need to be handled with care to prevent damage.

V-shaped scratches from sharp objects may weaken the polyethylene material and lead to propagating cracks.

- Protect pipes from scratches during loading, transport, unloading and storage.
- Use a flatbed vehicle for transport and stack products in an orderly and secure fashion.
- Cover any sharp edges on forks of forklifts or use slings that cannot cause scratches to avoid damage to the pipes.

Polyethylene will expand slightly and become more flexible in high temperatures. Under cold conditions the material will shrink slightly and become stiffer.

- Pipe coils should be stored laying flat, unless properly supported and secured, in order to avoid deformation of the pipe.

5.1 On Site

- Inspect all material for damage upon delivery and before installation. Reject pipes with scratches or any other significant damage. Using material that has been damaged during transport, storage or handling will invalidate the warranty.
- Pipe coils should be stored flat with suitable protection for the bottom of the coil.
- Do not stack coils more than three coils high.
- Never drag, roll or throw pipes or fittings.
- Never expose pipes to open flame or excessive heat, for example sparks from metallic welding or cutting.
- Keep fittings in their protective packaging until installation. Damaged fittings may be difficult or impossible to install.

5.2 Coils

- Be careful when releasing coils as the pipe can straighten with considerable force. A minimum of two people is needed to uncoil the pipe. The end of the pipe should be constrained with a rope and a slipknot before cutting the bands around the coil.
- When cutting coils, one person should do the cutting and another person should hold the pipe.
- Uncoil pipes the day before installation. To help straighten the pipe it can be tied at either end to solid fixings.
- In colder climates coils should, if possible, be gently pre-warmed before uncoiling either by being stored indoors in a heated building overnight or in a container with a construction heating fan. Take care to not subject the pipe to excessive heat (over 60°C) that may damage the material.

6. SITE PREPARATION AND PIPE ARRANGEMENT

6.1 Site Readiness

- Check that no fuel contamination is present.
- Construction equipment and materials should be removed from the working area.
- The tank should be in position and the concrete base for the dispensers should be ready before the pipe installation begins.

6.2 Pipe Arrangement & Preparing Trenches and Beds

NextLPG pipes are designed for direct burial in the ground. They should not be laid in ducts made of steel, plastic, concrete or bricks or be used above ground. Consult Next-Plastics before installing NextLPG pipes in other ways than those described and recommended in this manual.

Pipe trenches and bedding

Trenches should be prepared with a bottom layer of 20 cm of clean sand, free of stones and sharp particles, on which the pipes are placed.

The best result is achieved when pipes are placed directly onto the bed. For minor adjustments, use bags filled with sand, placed under the pipe at minimum 1 meter intervals. Bags filled with sand should also be used to separate pipes that are crossing. Do not use wooden pieces as these will deteriorate over time leaving a void. Do not use stones or bricks as the sharp edges can damage the pipe. Styrofoam as a means of supporting or separating pipes should be avoided because the material will deteriorate fast if in contact with hydrocarbons. Pieces of plastic pipe risk being displaced during backfill and are often insufficient for pipe support, but can be used to separate parallel pipes.

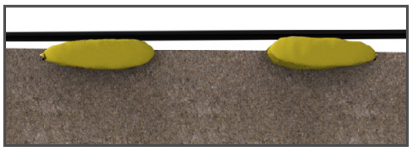

When pipes canot be laid directly onto the bed, bags with sand should be used to support the pipe at close intervals.

The sand used for bedding and backfill will need to be mechanically compacted with a machine approximately every 20 cm. The optimal layer depth depends on the machine used. Saturating sand with water can help compacting, but is not sufficient as the only compacting method.

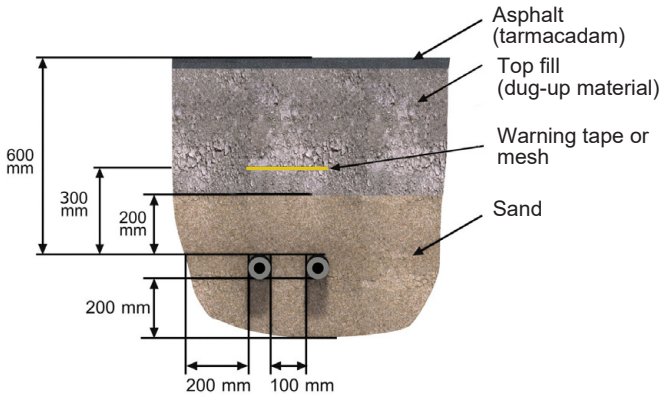

Minimum clearances.

When calculating the depth of the trench, consider that when the installation is complete, the pipe should be buried at a minimum of 600 mm from the top of the pipe to finished forecourt level. Deeper burial depths may be required in areas with car or truck traffic and in warmer climates. Follow standard requirements and national regulations for ground work.

Dig trenches wide enough to lay pipes no closer than 10 cm to each other and no closer than 20 cm to the side of the trench or any sharp object. Dig trenches that allow for soft bends rather than sharp 90° bends.

Pipe arrangement

Lay pipes on a bed of 20 cm of bedding material with a minimum of 10 cm between parallel or crossing pipes and a distance of minimum 20 cm to the side of the trench or any sharp object.

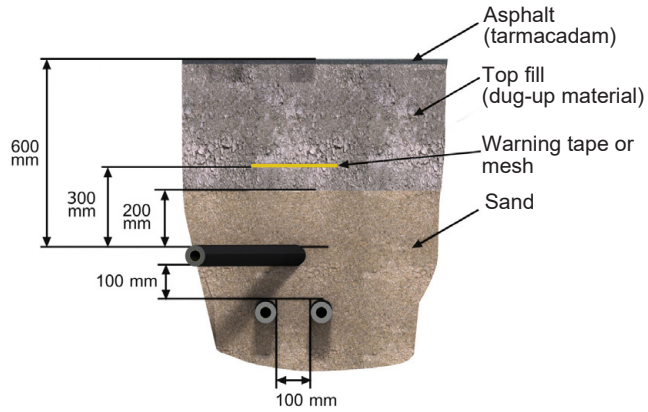

Minimum clearances for crossing pipes.

To compensate for movement of the pipe due to temperature changes or movement/settlement in the soil, lay coils in slight curves.

Avoid:

- Pipes crossing each other if another solution is possible using a different pipe layout.
- Burying metal parts in the soil.

The minimum bend radius allowed for the LPG pipe is 1 meter (20 x the pipe diameter).

6.3 Uncoiling Pipes

- Uncoil pipes the day before installation. To help straighten the pipe it can be tied at either end to solid fixings.
- Be careful when releasing coils as the pipe can straighten with considerable force. A minimum of two people is needed to uncoil the pipe. The end of the pipe should be restrained with a rope and a slipknot before cutting the bands around the coil.
- The natural curves of a coiled pipe can be used to change direction of the pipe or to achieve the correct angle at the end points. Bags filled with sand or stakes can be used to keep it in position until installation and backfill.



Use bags with sand to keep the pipes in place during installation.

- In colder climates coils should, if possible, be gently pre-warmed before uncoiling either by being stored indoors in a heated building overnight or in a container with a construction heating fan. Take care to not subject the pipe to excessive heat that may damage the material.



Recommended rollout of the pipe.



Avoid spiraling the pipe.

7. INSTALLATION

7.1 Pipe Installation

- Uncoil pipes the day before installation and check that all necessary tools and equipment are available.
- Place the pipes in the trench from tank to dispenser and cut to approximate length.
- Bend the pipe in the ends using the bending tool.
- Measure the exact height needed, mark the pipe and trim the pipe to desired height using the rotating pipe cutter.
- Mount the compression couplings NP CF10 with NP IC10-NPT insert.
- Measure conductivity.
- Prepare connections to the dispenser and to the tank.

Start with installing the longest pipe run. Then if you make a mistake, you can use the pipe for the next long pipe run.

7.2 Cutting the Pipe

To ensure that pipes can be properly used with the NP CF10 coupling it is important that they are cut absolutely square. Always cut pipes with the tools intended for this specific ourpose. Never cut pipes using a saw-edged blade of any kind.

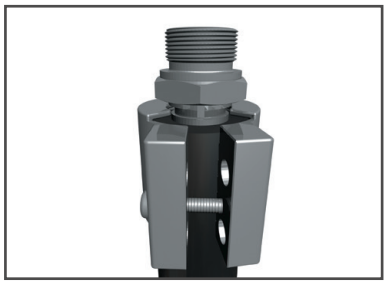

Pipes must be cut squarely to fit the NP CF10 fitting.

LPG pipes can be cut using pipe scissors intended for plastic pipes. To use the cutter, place the curved section on top of the pipe and the cutting blade under the pipe. Positioning the scissors this way is important as it helps achieving a square cut. Keep the bottom handle still and use the upper handle to cut. Check that your cut is square.

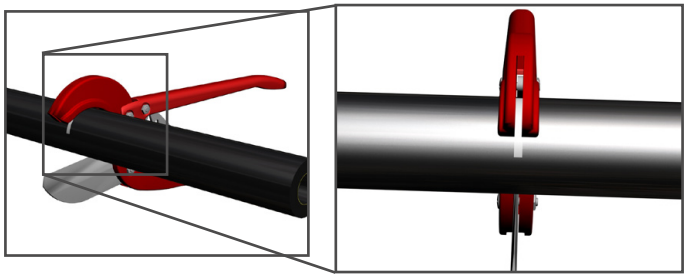

Pipe scissors can be used to cut NextLPG pipes.

A rotating pipe cutter for plastic pipes is the best tool for cutting NextLPG pipes squarely.

- Depress the release nut to open the cutter.
- Place the cutter with the rollers under the pipe and press the cutting wheel into contact with the pipe. Turn the cutting wheel feed knob clockwise half a turn.
- Rotate the cutter away from yourself and around the pipe for one lap. Turn the feed knob clockwise half a turn.
- Now rotate the cutter towards yourself and for each revolution turn the feed knob about 45° to press the cutting wheel further into the pipe. Repeat until the cut is completed.

Tip!

Use the pipe scissors to quickly cut the pipe to the approximate length, then use the rotating cutter for the final trim.

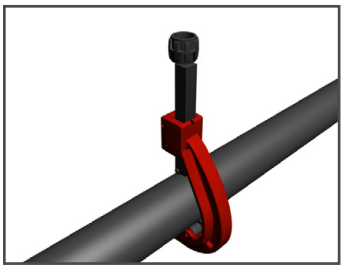

The rotating pipe cutter will cut the pipe absolutely square.

Safety

Be careful when cutting pipe that have been coiled, even if it has already been uncoiled as the cut ends tend to bend back into a curved form and risk hitting you or others, causing injury. One person should do the cutting while another person holds the pipe.

Use the deburring tool that comes with the pipe cutter to chamfer the inside of the pipe. This simplifies the mounting of the NP IC10-NPT insert. Do not use a regular knife, as there is a risk of unintentionally create v-shaped notches that may lead to cracks in the pipe.

To access the deburring tool, tip the cutter and press the release pin.

7.3 Bending the Pipe

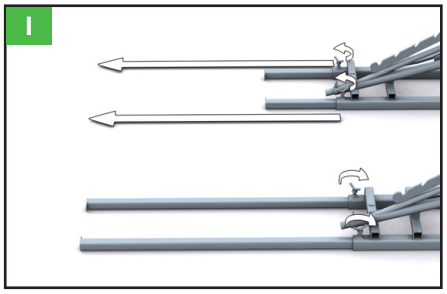

Unscrew the wing nut and pull out the extension runners fully. Tighten the nuts.

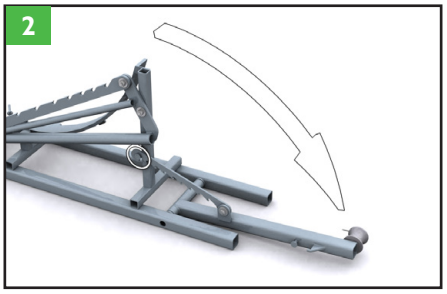

Turn down the roller castor runner.

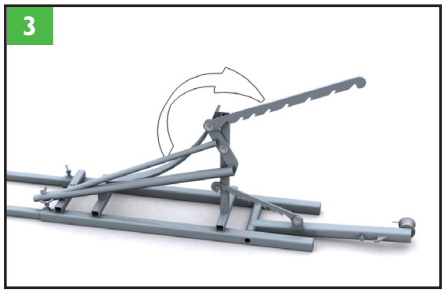

Release and swing the large catch over to the other side.

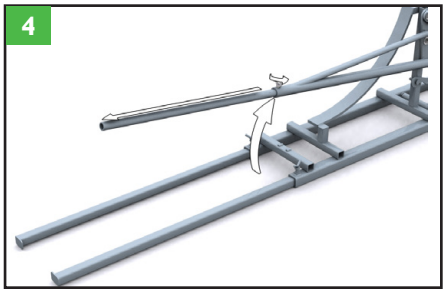

Unscrew the wing nut and pull out the handle to full length. Tighten the nut.

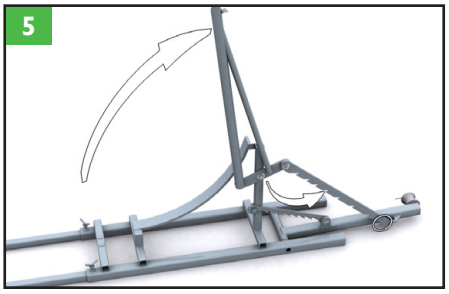

Lift the handle and set the large catch in starting position with the locking pin in the first notch.

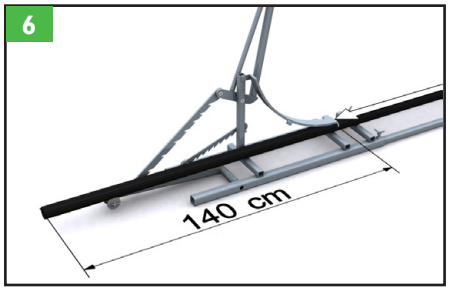

Place the pipe so that it protrudes at least 1.4 meter from the bend edge. This is will give a bend suitable for pipe burial at 60 cm. When deeper burial depths are required, adjust the pipe position accordingly.

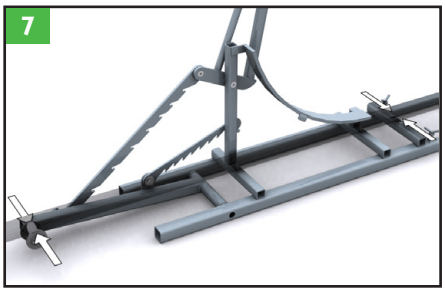

Make sure the pipe rests on the roller castor and between the two heels on the back of the bending tool.

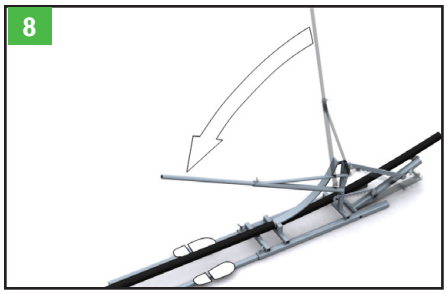

Stand with your feet on the runners on each side of the pipe and slowly pull the handle to start bending the pipe.

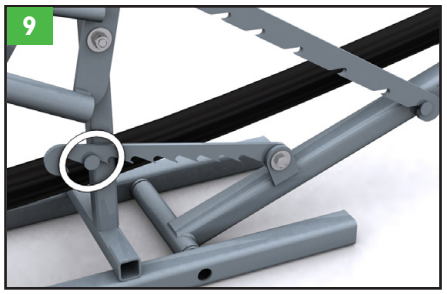

When the locking device clicks into the first notch, release the handle.

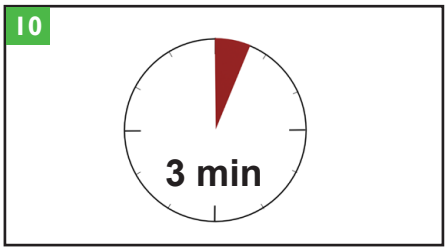

Pause for 3 minutes to allow for the pipe to adjust.

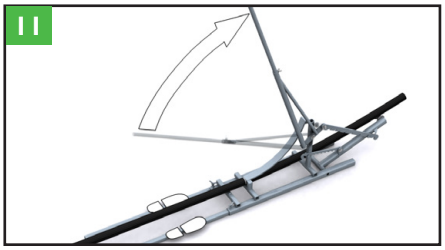

Stand on the runners and slowly pull the handle until the bending tool clicks into the next notch.

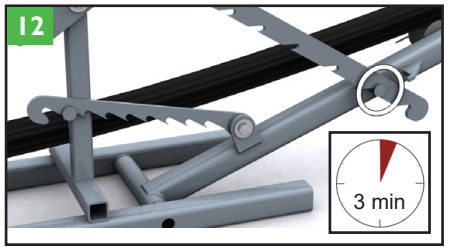

Release the handle and wait for 3 minutes.

Repeat the process until the pipe is fully bent. Pause 3 minutes between each notch.

13

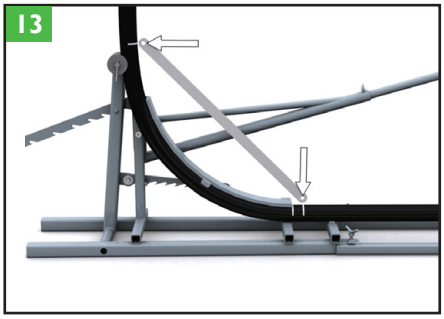

Take out the fixing strap. Measure the approximate position for the clamps.

14

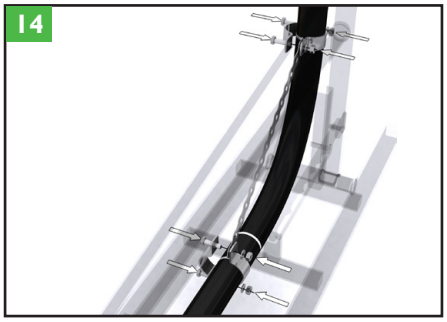

Mount the bolts, washers and nuts with the metal band directly under the bolts.

15

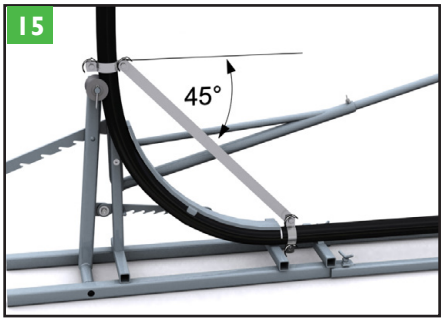

Make sure the metal band is at approximately a 45 degree angle before tightening the bolts.

16

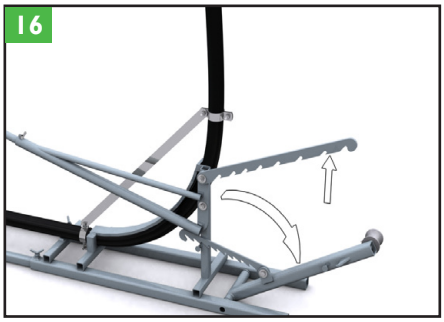

Press the handle slightly and release the locking mechanism.

17

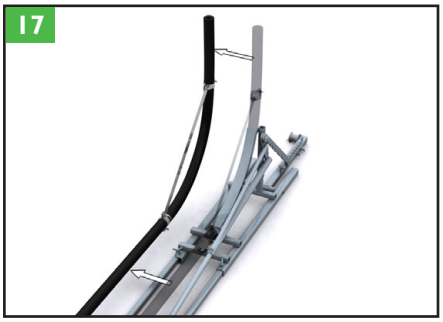

Remove the pipe from the bending tool.

18

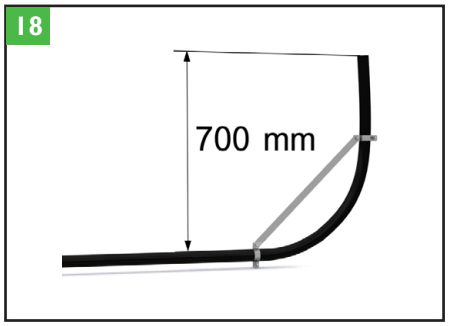

The bend should be minimum 70 cm high, more if you have a burial depth greater than 60 cm.

19

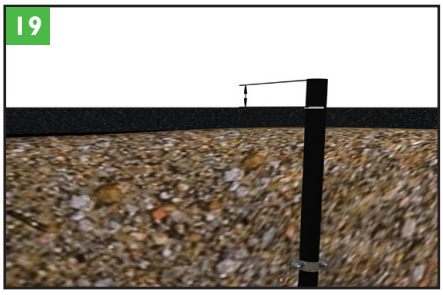

Place the pipe in the trench and measure and mark the exact height required. The pipe should end at finished forecourt level.

20

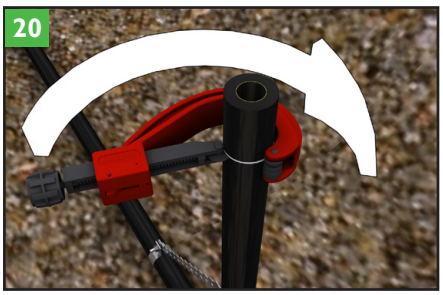

Cut the pipe to its finished length using a rotating pipe cutter.

Minimum Bend Radius

Using the bending tool, pipes can be bent to a radius of approximately 10 x pipe diameter. Example: 10 x 50 mm = 500 mm radius.

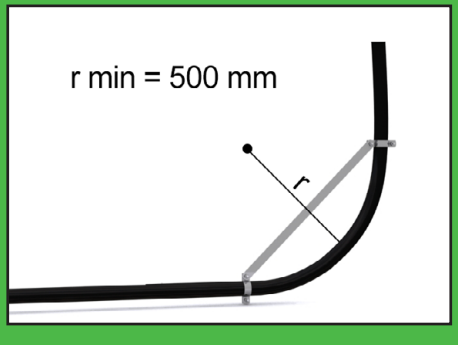

7.4 Mounting the Transition Fittings

For transition from plastic to metal, use the NP CF10 compression coupling in combination with the NP IC10-NPT threaded insert.



The NP IC10-NPT insert.

Always use a torque wrench to control the torque when mounting the NP CF10 compression coupling. If you apply too much force too quickly you may crack the bolts or even the coupling.

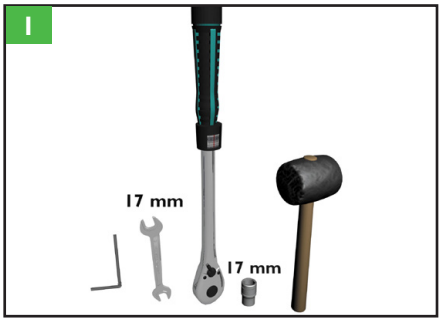

You need: hex key, wrench n:o 17, torque wrench (20-47 Nm) with socket n:o 17 and a rubber mallet.

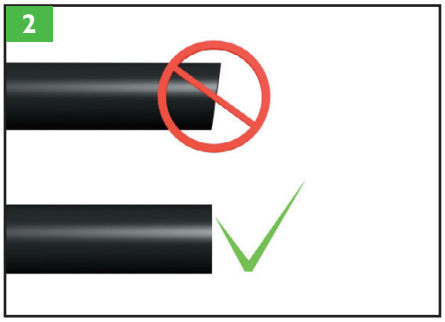

Make sure the pipe is cut squarely.

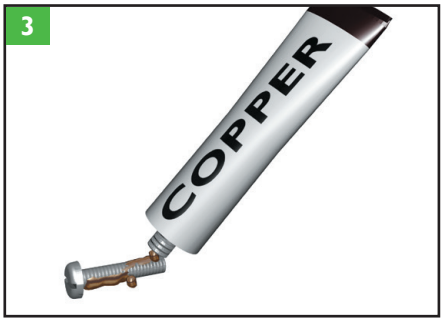

Lubricate the smaller mounting screw using copper paste, ceramic paste or MoS2.

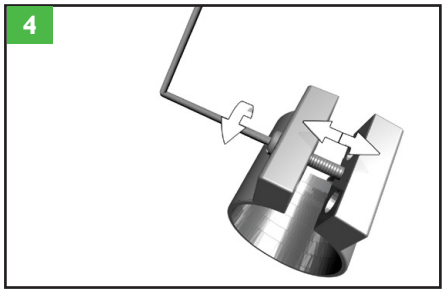

Insert the screw and screw it clockwise to open the coupling.

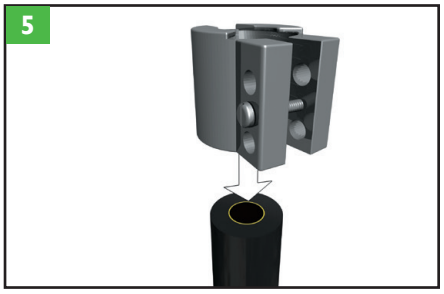

Mount the coupling onto the pipe end.

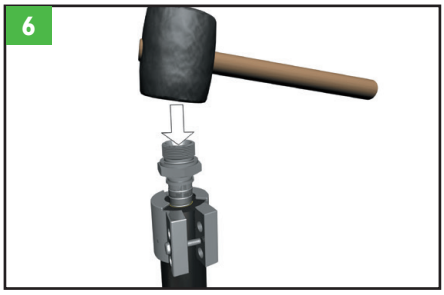

Use a rubber mallet to hit the insert NP IC10-NPT completely into the pipe.

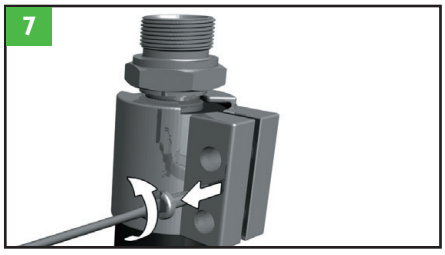

Unscrew the mounting screw.

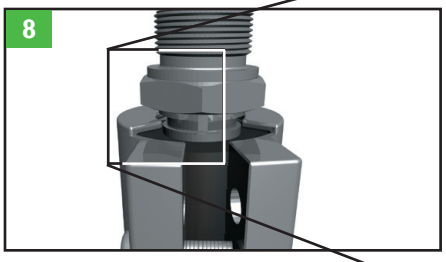

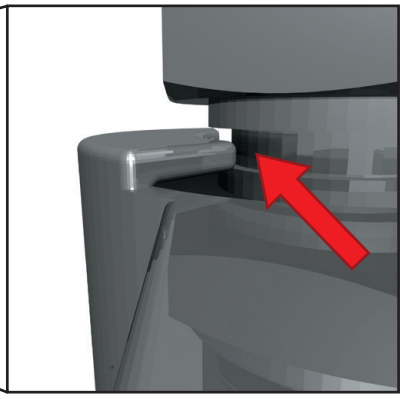

Make sure the edge of the NP CF10 rests in the groove of the NP IC10-NPT insert.

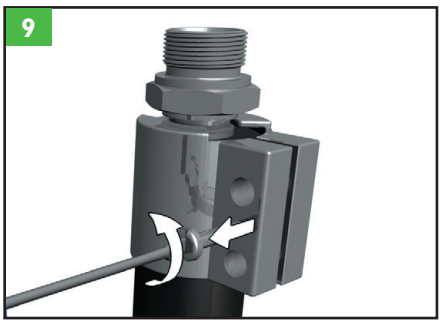

Remove the mounting screw.

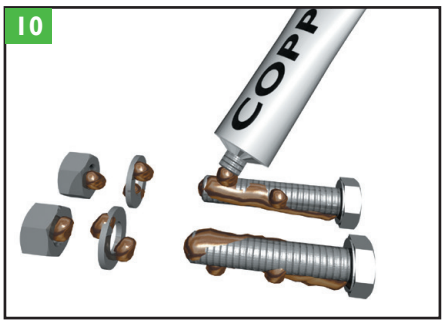

Lubricate the bolts, washers and nuts with copper paste, ceramic paste or MoS2.

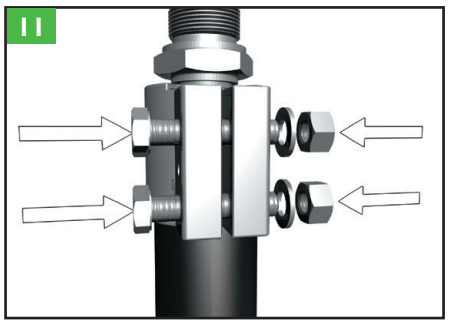

Mount the bolts, washers and nuts on the coupling.

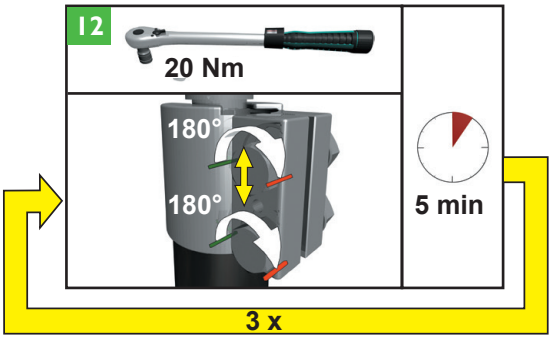

Set the torque wrench to 20 Nm. Tighten the bolts alternatively, half a turn each, up to 20 Nm.

Wait 5 minutes before continuing.

Repeat 3 times.

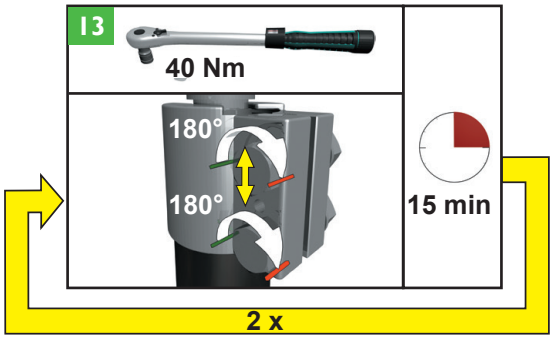

Set the torque wrench to 40 Nm. Tighten the bolts alternatively, half a turn each, up to 40 Nm.

Wait 15 minutes before continuing.

Repeat 2 times.

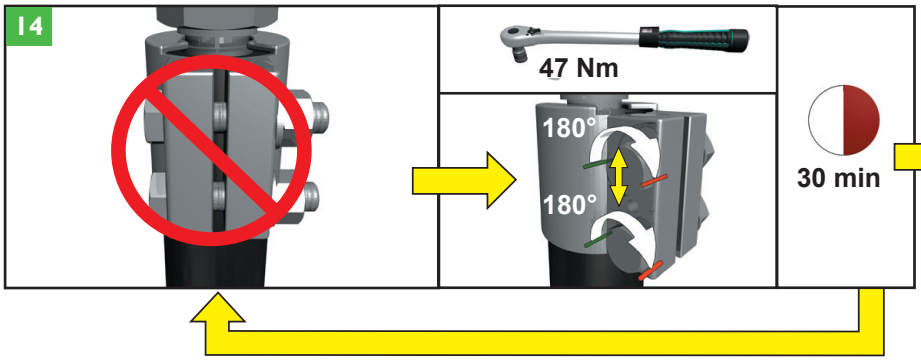

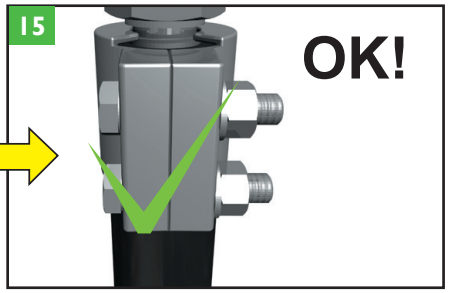

Set the torque wrench to 47 Nm. Tighten the bolts alternatively, half a turn each, up to 47 Nm.

Wait 30 minutes before continuing.

Repeat until the coupling is completely closed.

7.5 Testing conductivity

The NextLPG pipe has a conductive inner layer that dissipates static electricity. The pipe, the transition fittings and other connected metallic fittings and pipes will form a continuous conductive path that, when connected to earth, eliminates electrostatic hazards.

When the NP CF10 and NP IC10-NPT have been mounted on the pipes ends you should test the conductivity in the pipe from end to end using an insulation meter.

Ensure proper measuring procedures are used. If in doubt, consult a competent professional for advice.

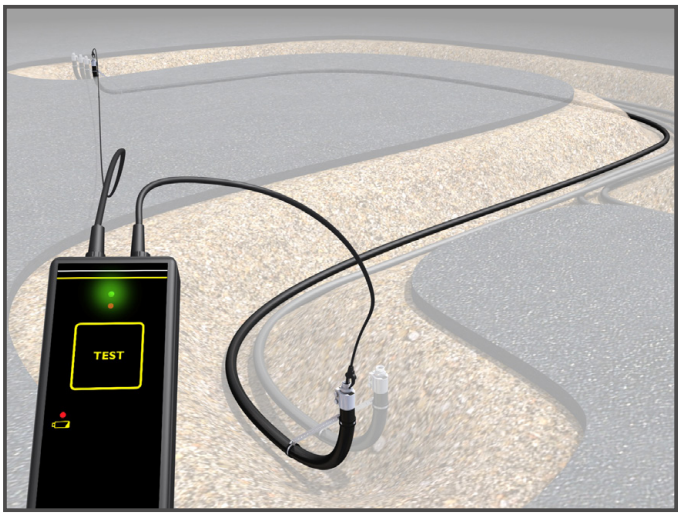

7.6 Earthing

The conductive LPG piping system must be connected to the main earth at the installation point and adjacent conductive objects bonded according to applicable regulations and legislation.

Always consult a competent electrical engineer, familiar with national regulations, to make sure that earthing and potential equalization of the piping system and adjacent installations are done in a correct way to prevent electrostatic hazards.

7.7 Connecting to the tank and dispenser

Use the NP IC10-NPT insert and LPG21S threaded flange.

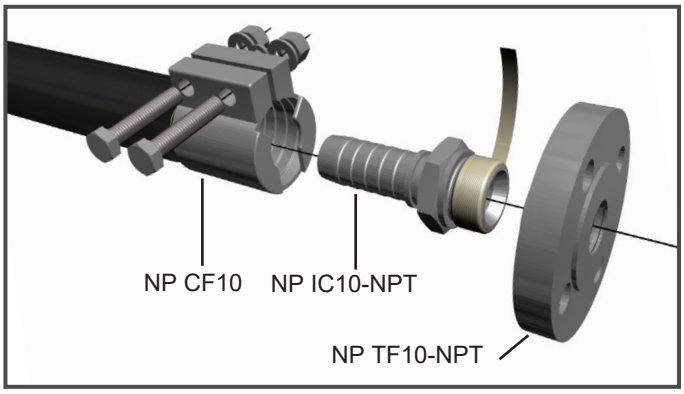

Assembly for transition via threaded flange.

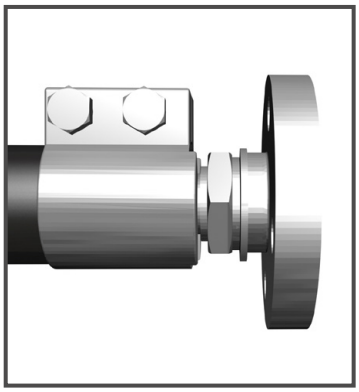

Finished assembly.

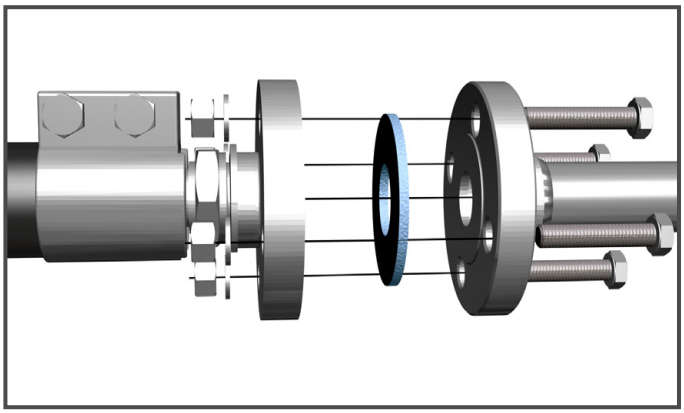

Use a fibre gasket between flanges.

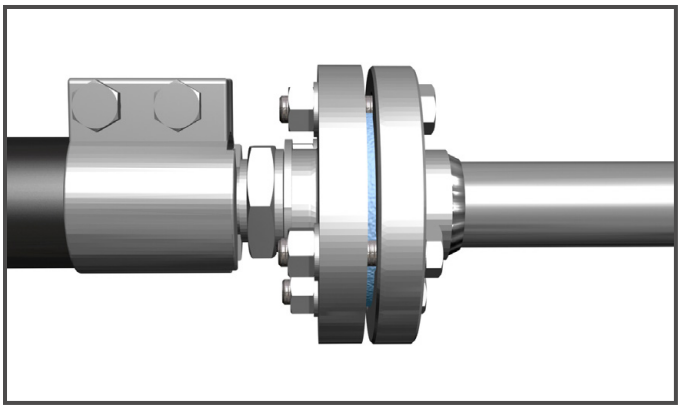

Finished assembly.

Sealing of threads





All threads and should be sealed with thread sealing tape (gas resistant).

Lubrication of threads



All threads on bolts and nuts must be lubricated with copper paste, ceramic paste or MoS2.

Safety relief valves

A safety relief valve must be fitted on all sections of pipe that may be shut by valves of any kind. The safety relief valve should be set to max 25 bar to prevent excessive pressure caused by thermal expansion of the LPG or any system malfunction.



Manifold prepared to be fitted with safety relief valve.

8. PRESSURE AND TIGHTNESS TESTING

Correctly performed pressure and tightness tests are essential to ensure the quality of the installation and problem-free operation.

All pressure and tightness testing must comply with local, national or regional rules and regulations. The pressures and test times specified here are the minimum requirements for a valid Next-Plastics warranty. Local, national or regional rules and regulations may require stricter testing to be performed. Special accreditations or permits may be required for pressure testing with gases at high pressures.

Safety

When fuel has been present in any part of the system to be tested, nitrogen must be used for testing. Ensure that all pipes have been thoroughly flushed from fuel and fuel vapors using nitrogen before commencing any work.

Unauthorized people must not have access to the site during the time when high pressures are applied to the system. Only the necessary personnel should be present. Everyone on site should be warned about the pressure test and avoid standing at an angle where they risk being hit by any components from the piping system that may come loose during the pressure test.

Before applying pressure to the system, make a risk assessment and ensure that all personnel keep a secure distance to the system when it is under pressure. All national, regional and local safety regulations must be adhered to.

Equipment.

- Equipment to blank off the pipe run in both ends.
- Metal flanges or plugs with test ports.
- Pneumatic tubing.
- Compressed air or nitrogen.
- Soap solution, made from water and a bit of detergent, such as soap, washing-up liquid or similar. Put in a spray bottle for easy application or use sponge and a bucket.
- Pressure gauge for pressure test.
- Pressure gauges for tightness test. The scale of the gauges should show the pressure used for testing in the middle of the scale.
- Mirror.

8.1 Pressure Test - Mandatory

Objective	Test method	Verification
• Finding potentially weak parts in the system.	• 25 bar (363 psi) for 5 minutes. (Max. 40 bar / 580 psi)	• No parts should come loose.

- Always disconnect or separate the pipe run to be tested from the tank and from the dispenser. Any testing of the tank or the connection of the pipes to the tank should be done in a separate step.
- Pressurize with air or nitrogen to a pressure of 25 bar (363 psi) and hold the pressure for 5 minutes. If regulations require testing with a higher pressure, follow the regulations, but do not apply a higher pressure than 40 bar (580 psi).

If correctly installed, no parts should come loose.

8.2 Tightness Test - Optional

Objective	Test method	Verification
• Finding any leaks in the system.	• 0.02-0.70 bar (0.3-10 psi) for 1 hour. Adapt the pressure to the resolution of the manometers used. (Max. 25 bar / 363 psi) • Soaping of all joints. • Document pressure and temperature during test period.	• Bubbles indicate leakage. • Declining pressure that cannot be explained by a temperature drop indicates leakage.

The tightness of a piping system before backfill is validated by:

1. Soaping all joints when the pipe is pressurized. Bubbles indicate leakage.
2. Reading any pressure and temperature variations during a test period. A declining pressure indicates leakage.



Tip!

Soaping is the best method for locating a leak.

The formation of bubbles is a sure indication of leakage.

Procedure

- Pressurize the pipe with air or nitrogen to a pressure of 0.02 to 0.70 bar (0.3-10 psi). Adapt the test pressure to the resolution of the pressure gauges used so that variations in pressure can be read easily. If regulations require testing with a higher pressure, follow the regulations, but do not use a pressure higher than 25 bar (363 psi) for tightness testing.
- Document the starting pressure.
- Apply soap solution to all joints (starting with the test equipment and its connections) and look for bubbles that indicate leakage. Pay attention to the soaping under the pipes and if necessary use a mirror for a clear view of the bottom of the pipes.
- Document the pressure and ambient temperature at 10 minute intervals for a period of 1 hour. There should be no pressure variations that do not have a reasonable explanation in recorded temperature variations.
- After 1 hour re-test all joints with soap solution.

If using a less accurate pressure gauge, prolong the test period to 4-24 hours.

Guidelines for judging pressure variations during tightness testing

All pressure variations should have a reasonable explanation in documented temperature variations. The pressure of the gas used for tightness testing increases and decreases with the temperature.

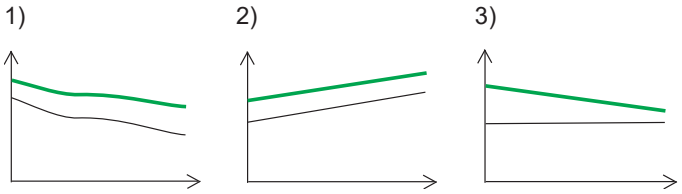

Temperature and pressure as a function of time. Green curve = pressure. Black curve = temperature.

Scenario 1

Over the test period the pressure has varied and dropped some, but the temperature shows very similar changes. Unless any leaks were identified during soaping, the system is likely to be tight.

Scenario 2

Over the test period the pressure has increased some. This is explained by the increase in ambient temperature recorded during the same period. Unless any leaks were identified during soaping, the system is likely to be tight.

Scenario 3

The temperature has kept quite still during the test period, but the pressure dropped slightly. This is very likely due to a leak. Identify the place of the leak by soaping.

9. COMPLETING THE INSTALLATION

9.1 Documentation

The NextLPG Installation Checklist must always be filled in by the installing contractor and saved for the duration of the warranty period. This is a requirement for the 5 year Next-Plastics product warranty.

It is a strong recommendation to also save the following documentation:

- Documentation of conductivity testing.
- Documentation of pressure and leakage testing.
- Photos of the installation before backfill.
- As-installed-drawing.

9.2 Backfill

Backfill may be undertaken only after successful completion of conductivity, pressure and leakage tests. Check that pipe arrangement is according to instructions.

Proper backfill supports the pipe, protects it from mechanical damage and handles the effects of thermal expansion/retraction, heavy traffic or other loading imposed on the pipe system.

Clean sand (3 mm grains) shall be used for backfill. The sand needs to be mechanically compacted with a machine approximately every 20 cm. The optimal layer depth depends on the machine used. Compacting can be done using hand-held tampers, diesel driven impact tampers or vibratory plates. Saturating sand with water can help compacting, but is not sufficient as the only compacting method.

Take care that the pipes are not damaged or moved out of position during compacting. Do not compact on top of the pipes until at least 30 cm of backfill material has been put over the pipes. Increase this distance when heavy or powerful devices are used.

The space within 200 mm of the pipes should always be filled with sand. The sand must be free of organic material, snow, ice or fuel contamination.

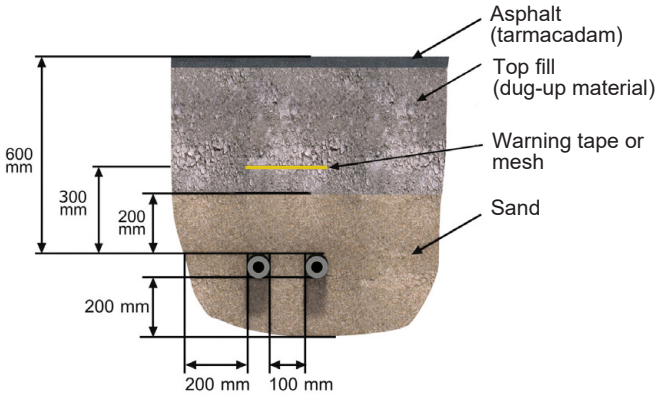

Minimum clearances.

Special attention should be given to backfill under the pipes to make sure there are no voids under the pipe. Compact the sand also under, on the sides of, and in between the pipes for best long term performance.

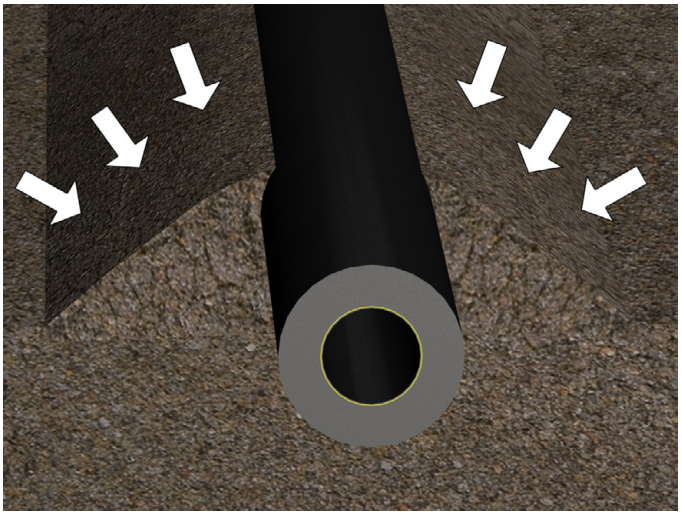

Backfill carefully under the pipes.

The pipe should be buried at a minimum of 600 mm from the top of the pipe to finished forecourt level. Deeper burial depths may be required in areas with car or truck traffic and in warmer climates. Follow standard requirements and regulations for ground work.

Place marker tape minimum 30 cm above the pipes or according to applicable laws and regulations.

9.3 Before commissioning

Make sure the inside of the piping system is free from dirt and contamination. Flush with air or nitrogen to clean the pipes.

10. MODIFICATION AND REPAIR OF INSTALLATIONS

10.1 Preparations and Safety Considerations

It is a strong recommendation that the filling station is closed during any modification or repair works. Access to the site should be restricted and all relevant safety regulations strictly adhered to. Equipment used at the site should be checked to ensure operational condition.

The tanks and the piping system must be emptied and flushed clean or otherwise secured to make sure no fuel or fuel residue or vapors are present where work is to be done.

Electrical equipment such as dispensers and pumps should be disconnected.

10.2 Modification and Repair

In case of modification or repair, do not open and re-use the compression coupling NP CF10 or the NP IC10-NPT insert. Always replace with new fittings.

If the NextLPG pipe has been damaged, the whole pipe must be replaced. An undamaged existing pipe can be reused, either in its full length with the existing bends or for a shorter pipe line.

If an existing pipe needs to be shortened for re-use, first cut away the exisiting bend before making a new one. Do not try to modify an already bent section of pipe.

10.3 Pressure and Tightness Testing After Modification and Repair

After modifications or repairs of a system where fuel has been present, only nitrogen must be used for pressure and tightness testing. Never use air or fuel for pressure testing.

11. SAFETY CONSIDERATIONS

Next-Plastics recommends that a job safety analysis is done to assess potential risks for work on site. Appropriate safety measures should then be taken and protective equipment used to prevent accidents, injuries and incidents. Special attention should be paid to safety in potentially hazardous areas when doing repair, maintenance or upgrading work.

11.1 Releasing and Cutting Coils

Be careful when releasing coils as the pipe can straighten with considerable force. A minimum of two people is needed to uncoil the pipe. The end of the pipe should be constrained with a rope and a slipknot before cutting the bands around the coil.

- When cutting coils, one person should do the cutting and another person should hold the pipe.
- Uncoil pipes the day before installation. To help straighten the pipe it can be tied at either end to solid fixings.
- The natural curves of a coiled pipe can be used to change direction of the pipe or to achieve the correct angle for entry into a sump. Bags filled with sand or stakes can be used to keep it in position until installation and backfill.



One person should hold the pipe and another do the cutting.

Be careful when cutting pipe that have been coiled, even if it has already been uncoiled as the cut ends tend to bend back into a curved form and risk hitting you or others causing injury. One person should do the cutting while another person holds the pipe.

11.2 Use of Equipment

To avoid personal injury, exercise caution when using cutting tools.

Always perform the conductivity test in an area free from flammable liquids or vapors.

11.3 Pressure Testing

Follow any local, national or regional regulations and make a risk assessment before applying high pressures.

Use nitrogen for pressure and tightness testing whenever fuel has been present in the system.

Blank off the pipe from the tank before pressurizing. Do not pressurize a tank with fuel in it.

Unauthorized people must not have access to the site during the time when high pressures are applied to the system. Only the necessary personnel should be present. Everyone on site should be warned about the pressure test and avoid standing at an angle where they risk being hit by any components from the piping system that may come loose during the pressure test.

11.4 Repair, Maintenance and Upgrading Work

Before starting modification and repair work, make detailed risk assessments and take due precautions to eliminate or minimize risks. Follow all applicable health and safety regulations and make sure permit-to-work systems are in place.

It is a strong recommendation that the filling station is closed during any modification or repair works. Access to the site should be restricted and all relevant safety regulations strictly adhered to. Equipment used at the site should be checked to ensure operational condition and suitablity for intended use.

The tanks and the piping system must be emptied and flushed clean or otherwise secured to make sure no fuel or fuel residue or vapors are present where work is to be done. Electrical equipment such as dispensers and submersible pumps should be disconnected.

Equipment and tools to be used in potentially hazardous areas, where an explosive atmosphere may be present, must be classified as safe for this use according to national or regional regulations. See for example the European ATEX directive at http://ec.europa.eu/enterprise/atex/guide/.

11.5 Hazardous Substances

LPG

Hazard summary

- Liquefied petroleum gas can affect you when breathed in.
- Contact with liquefied petroleum gas may cause frostbite.

- Exposure to high levels can cause you to feel dizzy and lightheaded. Higer levels can cause suffocation and death from lack of oxygene.
- Liquefied petroleum gas is highly flammable and a dangerous fire hazard.

Ways of reducing exposure to hazardous substances

- Work in a well ventilated area.
- Wear protective clothing.
- Wash thoroughly immediately after exposure.
- On skin contact, immediately submerse the affected body part in warm water.

First aid

Eye Contact

- Immediately flush with large amounts of water for at least 15 minutes, occasionally lifting upper and lower lids. Remove contact lenses, if worn, while rinsing.

Skin Contact

- Immerse affected part in warm water. Seek medical attention.

Breathing

- Remove the person from exposure.
- Begin rescue breathing (using universal precautions) if breathing has stopped and CPR if heart action has stopped.
- Transfer promptly to a medical facility.

APPENDICES

A. Pipe Installation Example

B. LPG Pipe Installation Checklist

C. LPG Pipe Test Document

D. LPG Pipe Tightness Test

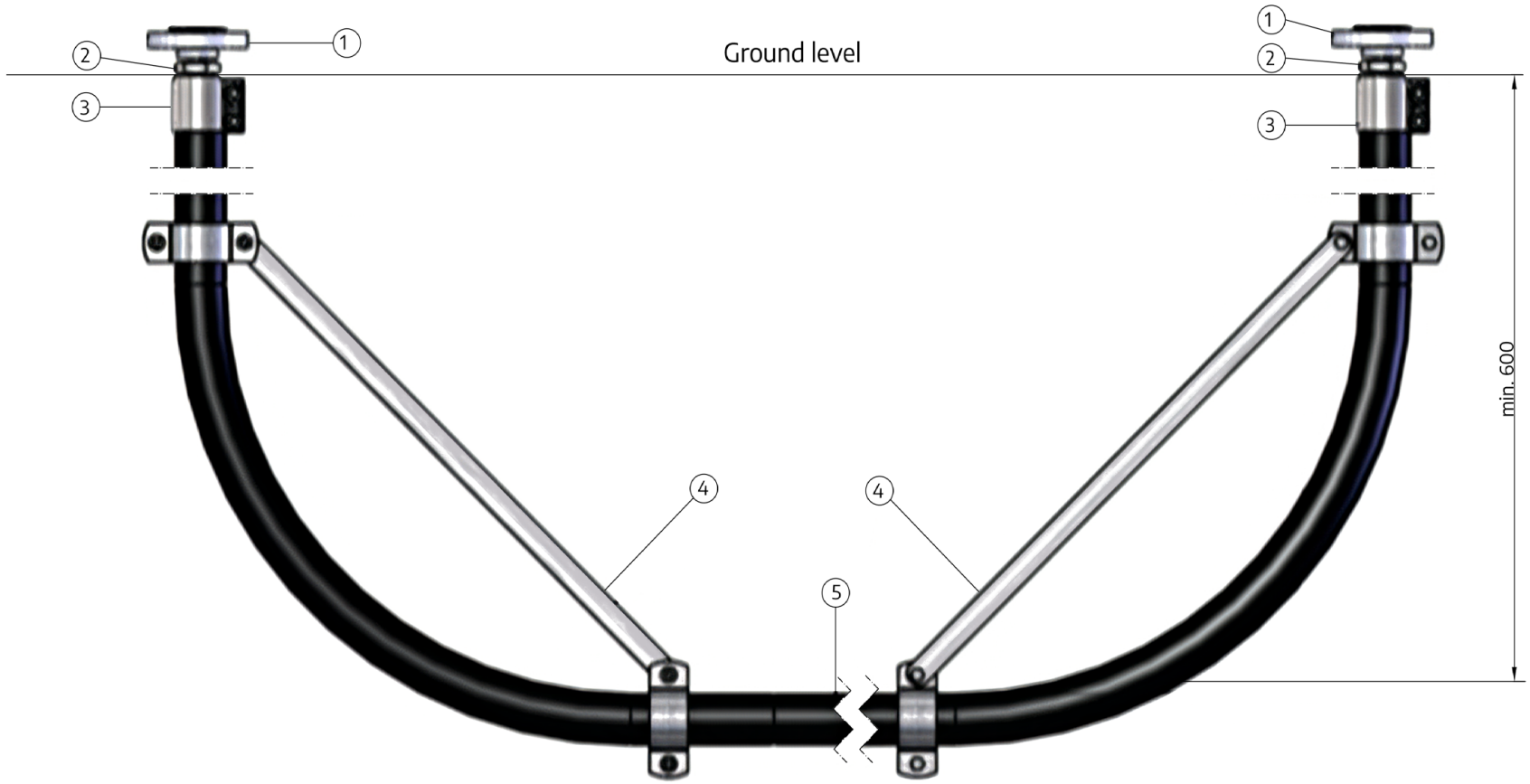

ITEM NO.	QTY.	PartNo	Description
1	2	NP TF10-NPT	Stainless steel threaded flange Φ105mm, thread 1" NPT
2	2	NP IC10-NPT	Stainless steel insert coupling Φ25mm, thread 1" NPT
3	2	NP CF10	Stainless steel compression fitting incl. bolts
4	2	NP FS63	Fixing strap for 90° bend
5	1	NP-LPG25-100	LPG pipe DN25, (OD51), packing: 100m coil

Sign / Date	Designed by	Drawn by	Checked by	General tolerance	Format	First angle projection	Scale
		Next Plastics			A3	ISO 128:1982	1:5

NEXT PLASTICS

Next Plastics LPG Product or VR Line

For above ground tank installation

Date

Drawing number

Revision: -

Sheet: 1/1

NEXT PLASTICS

LPG PIPE INSTALLATION CHECKLIST

To be completed and filed by the installing contractor during the warranty period.

Installing Contractor Information:		**Site Information:**	
Installer:	_____	Owner:	_____
Address:	_____	Site address:	_____
	_____		_____
Phone:	_____	Phone:	_____
Contact:	_____	Contact:	_____

- ☐ All NEXT-PLASTICS products used for installation were checked upon arrival at the site and free from freight and handling damages.
- ☐ All NEXT-PLASTICS products were handled with care during unloading and installation.
- ☐ All pipe trenches were excavated for a burial depth of 60 cm or more and to provide a minimum of 10 cm free space on either side of every pipe and minimum 20 cm free space to the trench wall.
- ☐ All pipes have been installed on a correctly prepared, 20 cm thick bed of sand (3 mm).
- ☐ All NEXT-PLASTICS pipes were cut squarely with NEXT-PLASTICS recommended pipe scissors or pipe cutters.
- ☐ The pipe was bent using the NEXT-PLASTICS LPG bending tool according to instructions in the NEXT-PLASTICS LPG installation manual.
- ☐ All NEXT-PLASTICS fittings were installed in accordance with instructions in the NEXT-PLASTICS LPG installation manual.
- ☐ All pipes were installed in accordance with the NEXT-PLASTICS LPG installation manual in order to allow for expansion and contraction.
- ☐ Conductivity test on all LPG pipes is performed according to the NEXT-PLASTICS LPG installation manual.
- ☐ Pressure test (of pressure lines) and leakage test (of all lines) with soaping has been performed in accordance with the NEXT-PLASTICS LPG installation manual and no leaks were detected.
- ☐ All backfill material consists of sand (3 mm) and the backfill has been performed according to the NEXT-PLASTICS LPG installation manual.
- ☐ The conductivity of the pipe runs has been tested and all lines passed the test.
- ☐ The system has been properly earthed and adjacent conductive objects bonded as advised by a competent electrician.
- ☐ Installing Contractor acknowledges that the warranty will be void unless a NEXT-PLASTICS certified LPG installer, i.e. trained and approved by a NEXT-PLASTICS approved instructor, has carried out the installation.

_____ _____

Certified Installer (license number, signature and company name) Installing Contractor (signature and company name)

_____ _____ _____ _____

Print Name Date Print Name Date

NEXT PLASTICS

LPG PIPE TEST DOCUMENT

To be filled in and saved by the installing contractor. Copy to customer/authorities if required.

Installing Contractor Information:		**Site Information:**	
Installer:	_____	Owner:	_____
Address:	_____	Site address:	_____
	_____		_____
Phone:	_____	Phone:	_____
Contact:	_____	Contact:	_____

Conductivity test: Before the pipe is connected to tank or to dispenser.
Strength test: 25 bar (363 psi) for 5 minutes.
Tightness test: 0.02 – 0.7 bar (0.29 psi – 10.15 psi) for 1 hours + soaping.

Pipe:	1	2	3	4	5	6	7	8	VR 1	VR 2	VR 3	VR 4	VR 5	VR 6	VR 7	VR 8
Conductivity																
Strength																
Tightness																

_____ _____
Installer (signature and company name) Installing Contractor (signature and company name)

_____ _____ _____ _____
Print Name Date Print Name Date

NEXT PLASTICS

LPG PIPE TIGHTNESS TEST

To be filled in during tightness test.

Site name: _____

Date: _____

Line: _____

Time (minutes)	**Temperature** (°C/°F)	**Pressure** (bar/psi)
0		
10		
20		
30		
40		
50		
60		

Soaping:	

Tightness confirmed: ☐ **Yes** ☐ **No**

_____
Installer

_____ _____
Print Name Date

NextLPG Product Range



NP LPG25-100
LPG pipe PN25
Ø 50 mm, 100 m



NP TF10-NPT
Threaded female flange NPT
Ø 105mm



NP CF10
Compression coupling
Ø 50mm



NP CC SET
Coupling set



NP IC10-NPT
Straight insert coupling
Ø 25 mm NPT 1” male



NP FS63
Fixing strap for 90º bend

www.next-plastics.com
info@next-plastics.com

NEXT PLASTICS